TSM-D200 Series

Description

- Digital MFM(mass flow meter)
- High accuracy : suitable for precise measurement
- Real time measurement and flow accumulation
- RS-485 digital communications

▲ Display Type (Optional)

Specifications

Model	TSM-D200	TSM-D210	TSM-D220	TSM-D230	TSM-D240	TSM-D245	TSM-D250
Flow Range (N_2 Equivalent)	0~7 sccm	7~1,500 sccm	1.5~30 slm	30~100 slm	100~400 slm	400~1,000 slm	1,000~2,000 slm
Flow Rate Measuring Range	2~100%						
Accuracy	≤ ± 1.0 % of Full Scale				≤ ± 2.0 % of Full Scale		
Response Time	≤ 1 sec						
Linearity	≤ ± 0.2 % of Full Scale				≤ ± 0.2 % of Full Scale		
Repeatability	≤ ± 0.2 % of Full Scale				≤ ± 0.2 % of Full Scale		
Seal Type	Elastomer (Viton®, Viton-ETP®, Kalrez®, etc.)						
Option	Accumulation, Display						
Signal Type	Analog Mode : 0~5VDC or 4~20mA Digital Mode : RS-485						
Power Supply	+15~24VDC						
Operation Temperature	5~50℃ (Recommended Temperature Range : 15~35℃)						
Warm-Up Time	15min (Accuracy Guaranteed : 30min)						

Flow range due to pressure condition

TSM-D200 Series can measure flow range between 0 and 5,000 slm depending on the pressure and fitting size.

X-axis : ΔP (bar) Y-axis : Flow rate (slm)

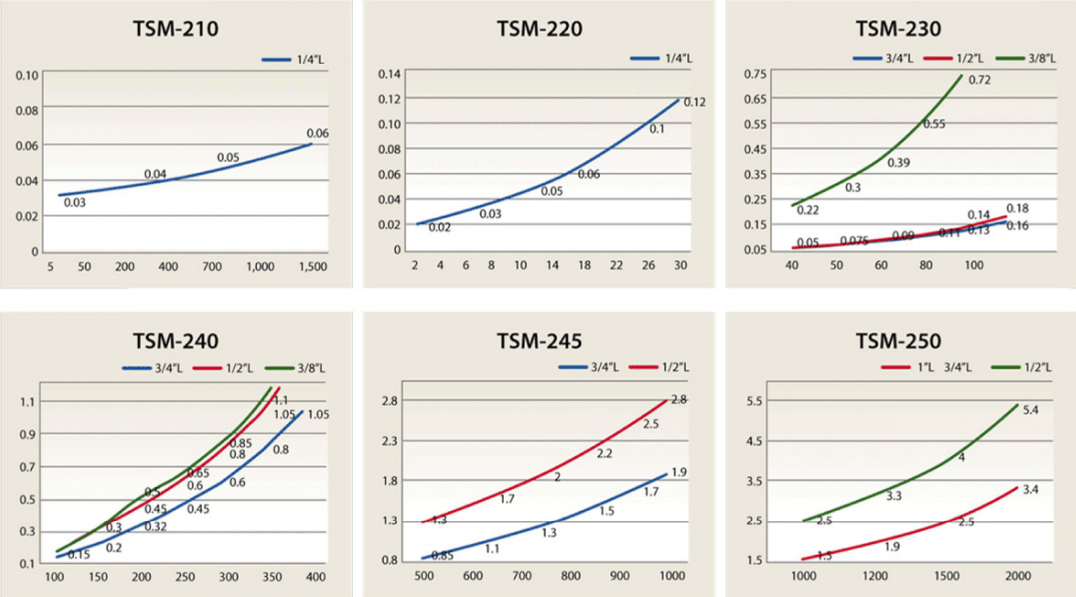

Production specifications

Digital MFM

Model	Flow Range	Fitting (L:LOK, V:VCR, F:Flange)								Seals		In/Out Signal		Function		Surface Finish	
		1/8"	1/4"	3/8"	1/2"	3/4"	1"	25A	40A	Rubber	Metal	0~5V	4~20mA	Display	Accumulation	B/A	E/P
200	0~7sccm	L	L/V	L	V					○		○	○	○	○	○	
210	0~1.5slm	L	L/V	L	V					○		○	○	○	○	○	
220	0~30slm	L	L/V	L	V					○		○	○	○	○	○	
230	0~100slm		L	L	L/V	L				○		○	○	○	○	○	
240	0~400slm		L	L	L/V	L				○		○	○	○	○	○	
245	0~1,000slm			L	L/V	L				○		○	○	○	○	○	
250	0~2,000slm				L	L	L	F		○		○	○	○	○	○	
260	0~5,000slm						L	F	F	○		○	○	○	○	○	

External dimensions

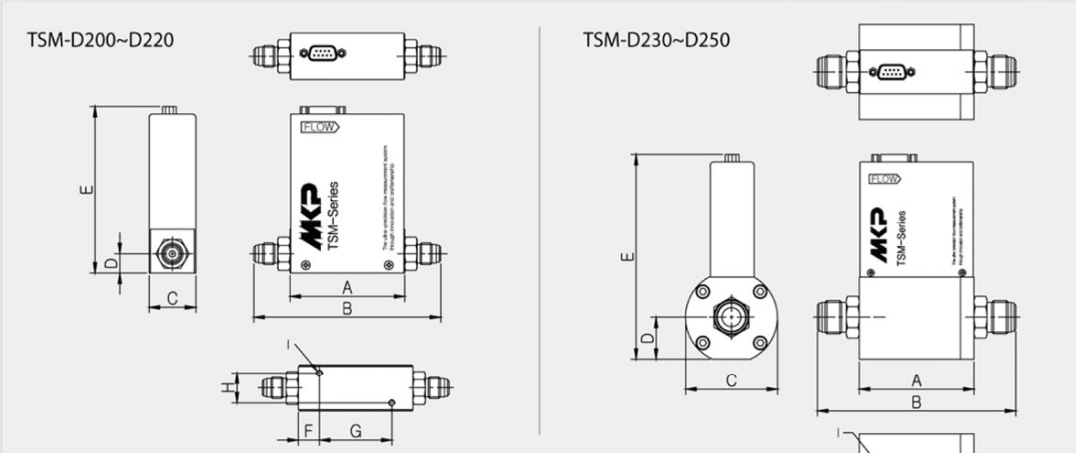

Model	A	B								C	D	E	F	G	H	I
		1/8"LOK	1/4"LOK	3/8"LOK	1/2"LOK	3/4"LOK	1"LOK	1/4"VCR	1/2"VCR							
TSM-D200~220	76	122.74	127.32	130.36	-	-	-	123.8	130.1	30.8	12.7	110.2	14	48	20	2-M4 DP:6
TSM-D230	76	-	128.84	131.88	137.48	145.6	-	-	131.4	35	21	123.2	24	48	20	2-M4 DP:6
TSM-D240	76	-	128.84	131.88	137.48	145..6	-	-	131.4	Ø 61	27.8	135.5	14	48	20	2-M4 DP:5.5
TSM-D245	130.1	-	-	189.02	194.6	198.18	-	-	189.1	Ø 79	36.4	154	26.5	48	-	2-M4 DP:6
TSM-D250	130.1	-	-	-	198.18	198.18	206.82	-	-	Ø 90	42.4	166	26.5	48	-	2-M4 DP:6

Unit : mm